BlueTiger™ Connected Optical Drive Family

CD-100 CD/MP3/WMA/FLAC Player

Data Sheet version 1.04

June 2009

StreamUnlimted Optical StorageGmbH
Gutheil-Schoder-Gasse 10
1100 Vienna
Austria

Phone: +43 1 60101 4998
Fax: +43 1 60101 4401

Copyright © 2008
Anagram Technologies SA and StreamUnlimited Optical Storage

All rights reserved. Reproduction in whole or in part is prohibited without the prior consent of the copyright owner. The information presented in this document does not form part of any quotation or contract, is believed to be accurate and reliable and may be changed without notice. No liability will be accepted by the publisher for any consequence of its use. ANAGRAM, BlueTiger, Q5, and Sonic2 are trademarks or registered trademarks of ANAGRAM Technologies. All other trademarks included herein are the property of their respective owners.

Abstract

Describes the BlueTiger CD-100 Commercial and Technical Specification.

Document History

No.	Primary Author(s)	Description of Version	Date Completed
v.0.1	MJi	Initial revision	11-06-2007

Related Documentation

Part Number	Description
BT-CD-100-PB	BlueTiger CD-100 Product Brief
BT-CD-100-SW-CMD-IF	BlueTiger CD-100 Software Command Interface
Q5M-PB -100A	Q5 Product Brief
S2M-PB-100A-	Sonic2 Technology Product Brief
JPL-2580	JPL-2580 tray loading mechanism specification
JPSL-33	JPSL-33 slot loading mechanism specification

Ordering Information

Part Number	Description	Package
BT-CD-100/10	CD-100 DSP board standard version	N/A
BT-CD-100/20	CD-100 DSP board SD6.3 compatible version	N/A
BT-CD-100/30	CD-100 DSP board CD-OPU version	N/A
BT-CD-100/FLAC	As CD-100/10 with extra decoding capabilities	N/A

Release Notice

This document is under configuration control and updates will only be issued as a replacement document with a new version number.

Confidentiality Notice

The information contained in this document is confidential information property of ANAGRAM Technologies SA and StreamUnlimited Optical Storage GmbH. No part of this document may be used or reproduced without written permission.

Copyright Notice

All rights reserved. No part of this work covered by the owners copyright may be reproduced or copied in any form or by any means (graphic, electronic or mechanical, including photocopying, recording, taping or information retrieval systems) without the written permission.

Preface

About This Manual

This document provides the commercial and technical information about the BlueTiger CD-100 CD/MP3/WMA player board. For a more detailed description of the Q5 SRC and Sonic2 linearity enhancer please refer to the Anagram website at http://www.anagramtech.com/. Support documents are listed in the section of this guide entitled Additional Documentation.

Company Addresses

StreamUnlimted Optical StorageGmbH
Gutheil-Schoder-Gasse 10
1100 Vienna
Austria
Phone +43 1 60101 4998
Fax +43 1 60101 4401

ANAGRAM Technologies SA
ZI Le Trési 6A
1028 Préverenges
Switzerland
Phone +41 21 804 1960
Fax +41 21 804 1961

Warnings and Restrictions

It is important to operate the BlueTiger CD-100 within the specified input and output ranges described in this document. Exceeding the specified input/output ranges may cause unexpected operation and/or irreversible damage to your development system. If there are questions concerning the input/output ranges, please contact a company representative prior to connecting the input power. Applying loads outside of the specified output range may result in unintended operation and/or possible permanent damage to your development system.

Document Structure

Chapter 1 Introduction
Chapter 2 Message Overview
Chapter 3 Action Messages Description
Chapter 4 Event Messages Description
Chapter 5 PC Interface Tool

Information About Cautions and Warnings

Note	
	*A **NOTE** provides additional or special information to assist operation. Disregarding a **NOTE** may cause inconvenience but will not result in personal injury or equipment damage.*

Caution	
	*A **CAUTION** is provided in a procedure whenever electrical or mechanical damage may occur. Failure to heed a **CAUTION** may result in some form of damage to the equipment; however, personal injury is unlikely.*

If You Need Assistance

If you have questions regarding either the use of this software command interface or the information contained in the accompanying documentation, please contact the StreamUnlimited Optical Storage.

Copyright

© 2007 ANAGRAM Technologies SA and StreamUnlimited Optical Storage GmbH. All right reserved

Contents of this publication may be not reproduced in any form without the written permission. Reproduction and / or reverse engineering of copyrighted software is prohibited.

Table of Contents

Preface **3**

Table of Contents **5**

List of Figures **7**

List of Tables **8**

1 Introduction **9**

1.1 Unresolved Issues *9*

1.2 Document Terminolgy *9*

2 Module Overview **9**

2.1 Communication *10*

3 Block Diagram/System Architecture **11**

3.1 Blockdiagram *11*

3.2 Data Flow CD-100 (non FLAC) *12*

3.3 Data Flow CD-100-FLAC *12*

4 Physical specification **13**

4.1 Dimensions *13*

4.2 Connectors *14*

4.2.1 Stuffing versions 15

4.2.2 Feature versions 15

4.3 Interfaces *16*

4.3.1 Signal specifications 16

4.4 Connector types and wiring requirements *17*

4.5 MX connector *17*

4.6 Audio connector *18*

4.7 Universal Control Connector *19*

4.8 Power 6.3 Connector (for compatibility with SD6.3) *19*

4.9 Power Connector *20*

4.10 Slot Loader Connector (for JPSL-33) *20*

4.11 Tray Loader Connector (for JPSL-2580) *20*

4.12 Traverse Connector for version CD-100/10 or CD-100/FLAC *20*

4.13 CD OPU Connector *21*

4.14 DVD OPU Connector *21*

5 Playability **22**

5.1 Media *22*
5.2 Decoders *22*
5.3 Test discs *22*

6 Sonic Scrambling™ 23
6.1 Sonic Scrambling *23*

7 I^2S Input 26

8 Power supply requirements 26
8.1 Power cycle timing *26*
8.2 Temperature *26*
8.3 Absolute maximum ratings *27*
8.4 Power Consumption *27*

List of Figures

Figure 1: Blockdiagram (standard version) 11
Figure 2: Buffers and data flow standard version 12
Figure 3: Buffers and data flow FLAC version 12
Figure 4: CD-100 Dimensions 13
Figure 5: CD-100 Connectors 14
Figure 6: Sonic Scrambling block diagram 24
Figure 7: Sonic Sonic Scrambling standard output configuration 24
Figure 8: 176.4kHz Sonic Scrambling output signals 25
Figure 9: Power cycle timing 26

List of Tables

Table 1: Stuffing versions 15
Table 2: Feature versions 15
Table 3: Signal levels 16
Table 4: Cable requirements 17
Table 5: MX connector 17
Table 6: Audio connector 18
Table 7: Universal Control connector 19
Table 8: Power 6.3 connector 19
Table 9: Power connector 20
Table 10: Slot loader connector 20
Table 11: Tray Loader connector 20
Table 12: Traverse connector 20
Table 13: CD OPU connector 21
Table 14: DVD OPU connector 21
Table 15: Playability - Media 22
Table 16: Playability - Decoders 22
Table 17: Playability – Test discs 22
Table 18: Audio signals 23
Table 19: Temperature Range 26
Table 19: Absolute maximum ratings 27
Table 20: Normal operating conditions 27

1 Introduction

This document specifies the Commercial and Technical Specification of the BlueTiger CD-100 DSP board. It is a board for use in the high end audiophile CD and CD/Receiver segment. BlueTiger CD-100 is a CD/MP3/WMA player module based on the StreamUnlimited SilverStrike™ loader mechanism. It contains the complete CD servo and decoder frontend as well as decompression and post processing of the audio data. Only D/A conversion, power supply and a simple frontboard is required to build a high end CD player.

1.1 Unresolved Issues

When the document is released, there may be requirements that cannot be resolved because the information required to finalise the requirement is not available. These requirements can be identified by the marker: [unresolved].

1.2 Document Terminolgy

May	indicates an action or feature that is optional
Optional	Describes a feature that may or may not be implemented
Shall	Indicates an action or feature that is mandatory and must be implemented to claim compliance to this standard
Should	Indicates an action or feature that is optional, but its implementation is strongly recommended

2 Module Overview

The BlueTiger CD-100 is based on the NXP SAA7824 CD-servo/decoder, ADI BF531 DSP with 64Mbit SDRAM, 512kB Flash and AMtek AM5910 5-channel driver.

The Module shall supports following loaders:
JPL-2580 high end tray loader
JPSL-33 slot-loading mechanism

It is tuned for use with the traverse mechanism:
Sony KHM313
DM3318 with Sanyo SF-HD850 OPU
Above mentioned combinations can be selected with the AC_Set_Loader command.
Optionally pin-compatible DVD OPU's such as Sanyo SF-HD850 and CD OPU's like SF-P101V or compatible may be supported.

2.1 Communication

The versions of CD-100 described in this document require a set controller to send high level commands and read back UI information. The formatting of the data read to fit the specific display used in the set has to be done in the host controller. For a list of command please refer to the CD-100 Module command interface specification. All high level commands for a basic implementation of a high end CD player are available as well as a set of commands that allow a different implementation of a certain feature or even a new one. For example CD-100 does not have a command for a programmable A->B repeat, but such a function can easily be implemented in the host micro by reading the current time on disc at the position A and B and sending the command Goto_Min_Sec_Frame on the disc to play and repeat the part between those positions . Similarly a search for an index can be done by reading the actual time and tracknumber plus index and doing a successive approximation to search for the beginning of a certain index. Another example is to implement ones own speed profile for tray open and close by making use of the parameter in the Open_Tray (resp. Close_Tray) command to switch between 3 speeds, up to the extend that a kind of PWM can be applied to the tray.

The software stack within the Blackfin DSP communicates over a UART interface. The other protocols supported (I^2C and SPI) make use of and I^2C/SPI to UART bridge which is a different stuffing version. As this adds cost to the module and complexity to the front panel SW implementation due to the fact, that the bridge IC has to be configured via the front panel and overflow of the FIFO inside this bridge IC has to be avoided, it is recommended to use UART communication whenever possible.

3 Block Diagram/System Architecture

3.1 Blockdiagram

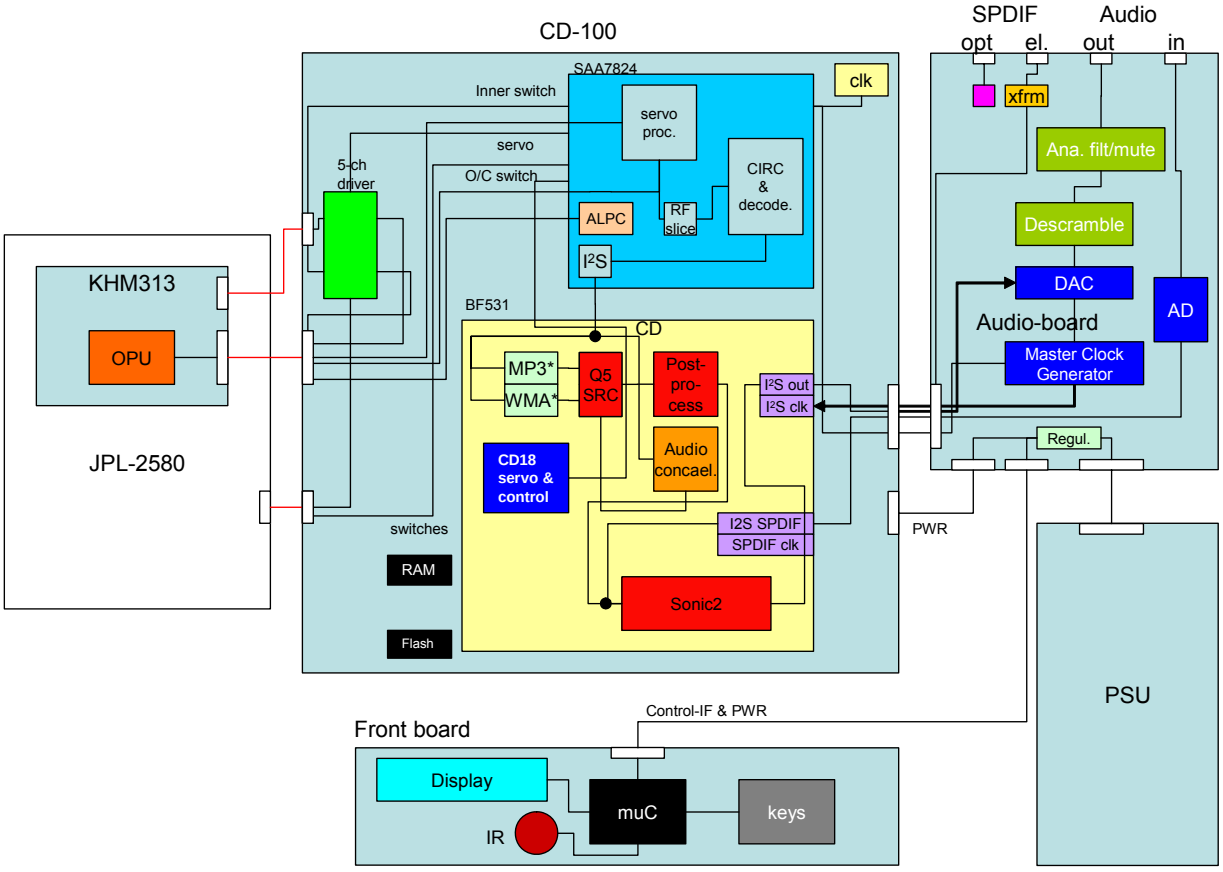

Figure 1: Blockdiagram (standard version)

3.2 Data Flow CD-100 (non FLAC)

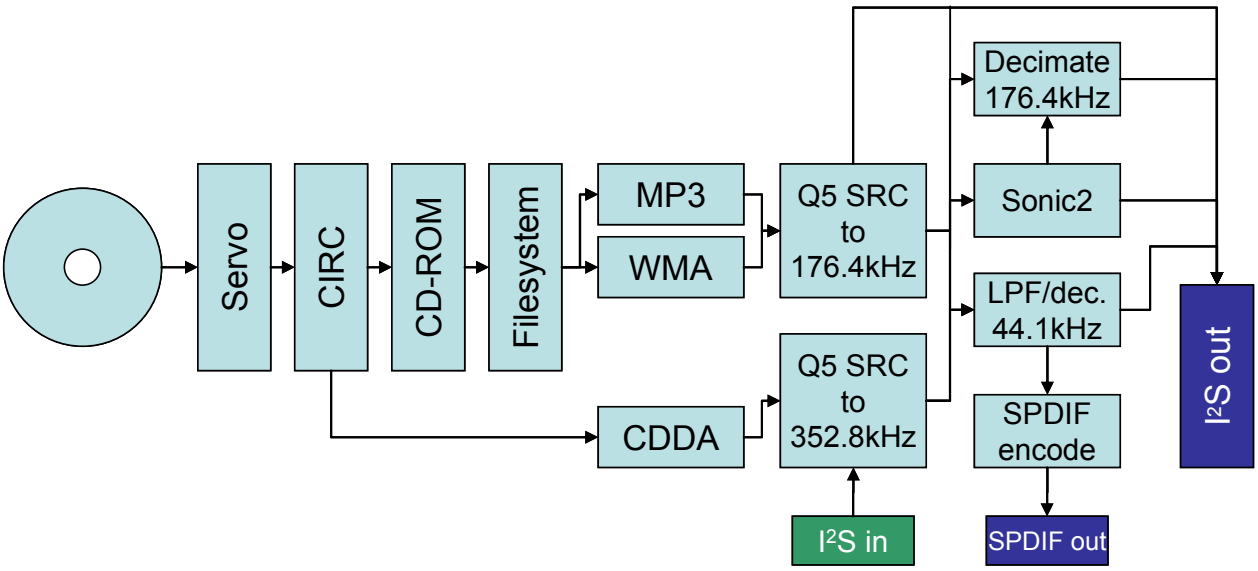

Figure 2: Buffers and data flow standard version

3.3 Data Flow CD-100-FLAC

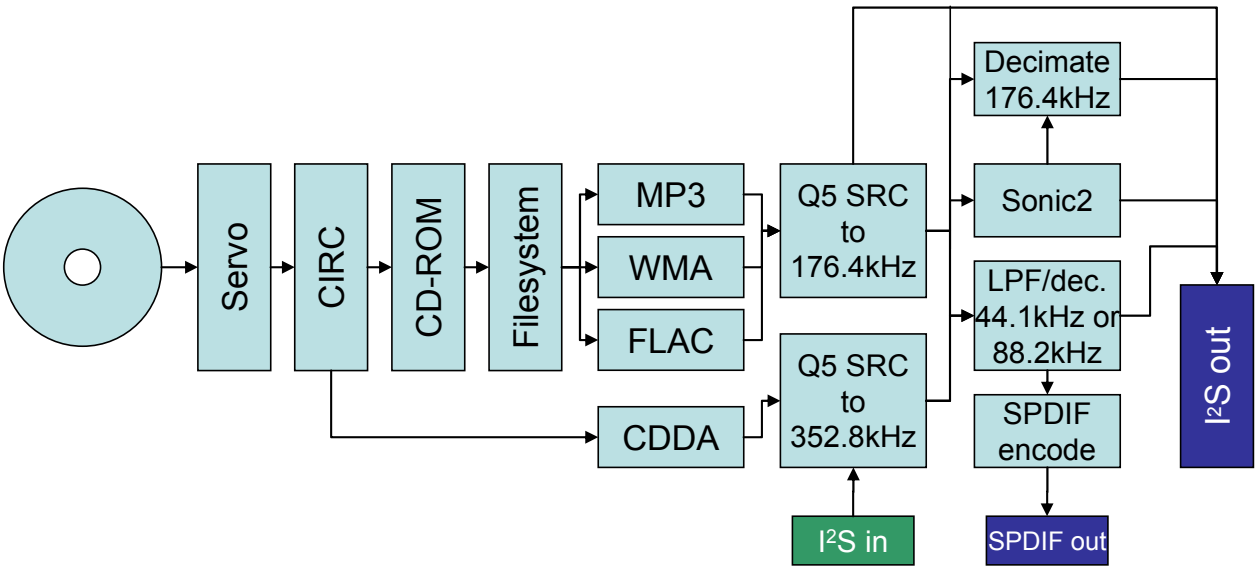

Figure 3: Buffers and data flow FLAC version

4 Physical specification

The PCB is a four layer board in double sided reflow soldering in fine pitch. The material is UL certified FR4. Capacitors and resistors prevail in 0603 dimension.

4.1 Dimensions

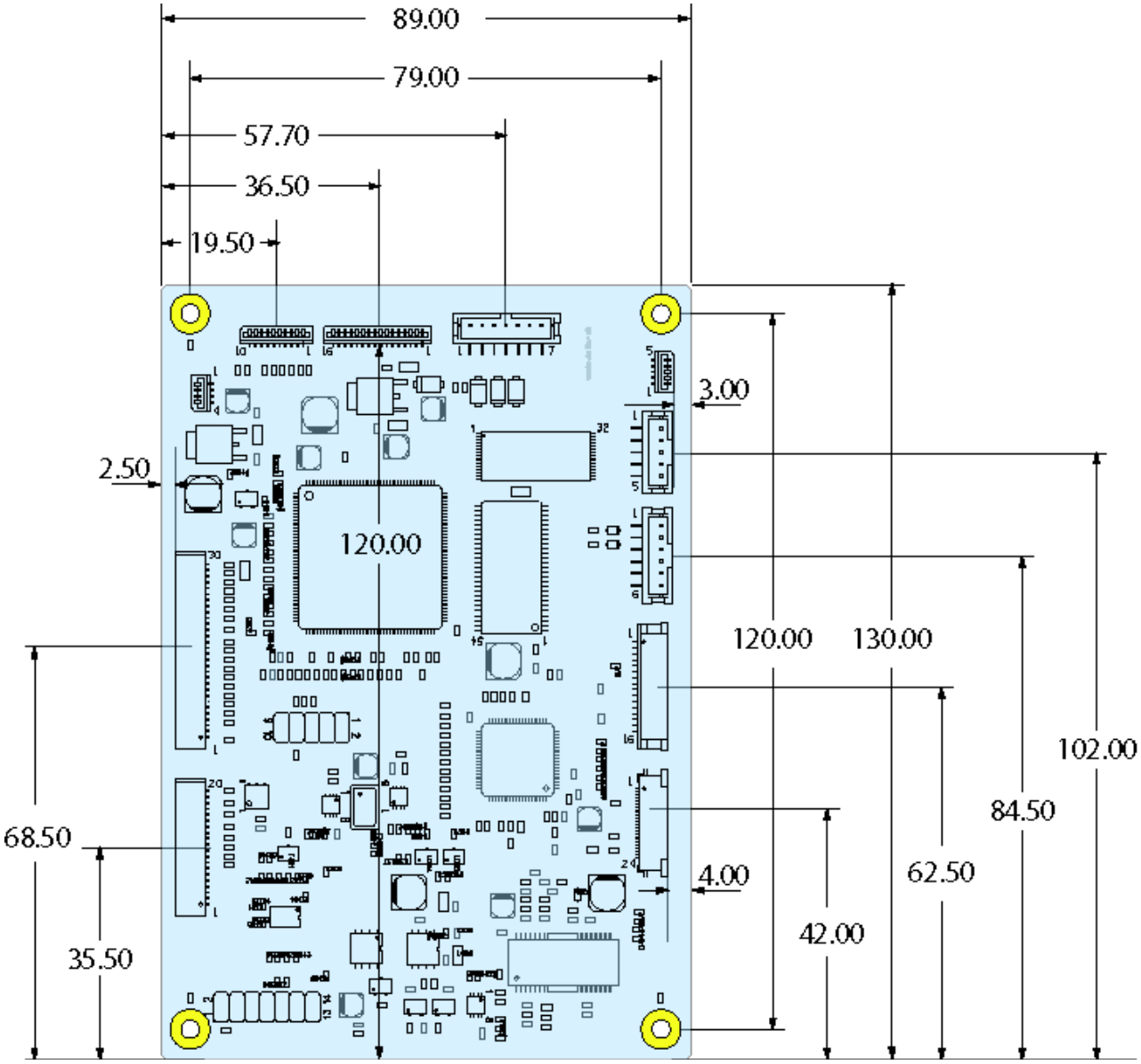

Figure 4: CD-100 Dimensions

4.2 Connectors

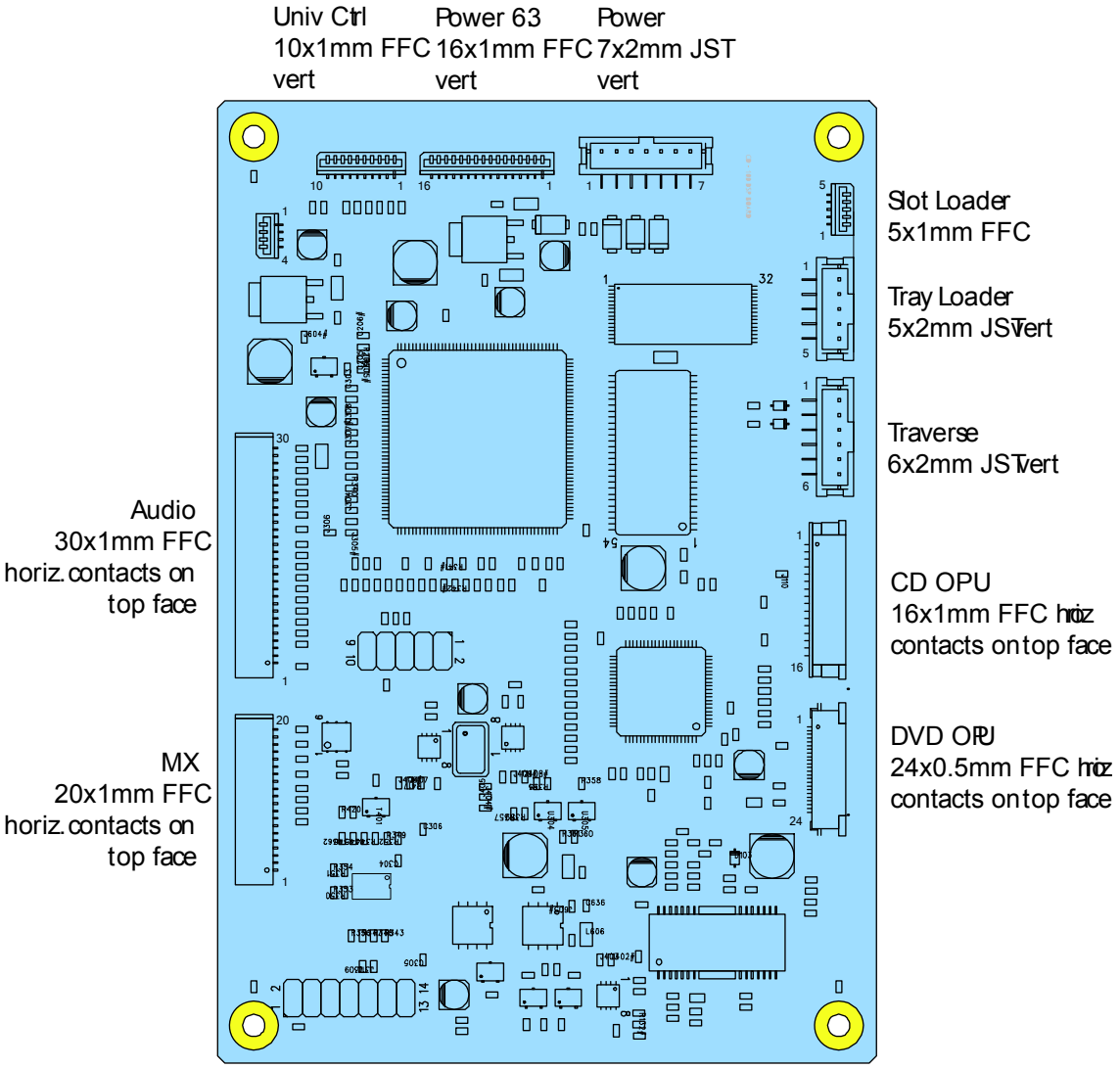

Figure 5: CD-100 Connectors

4.2.1 Stuffing versions

Connector	Description	CD-100/10 CD-100/FLAC	CD-100/20	CD-100/30
MX	FFC 20-way 1mm pitch side entry top contact	No	No	Yes
Audio	FFC 30-way 1mm pitch side entry top contact	Yes	Yes	No
Universal Control	FFC 10-way 1mm pitch top entry	No	No	No
Power 6.3	FFC 16-way 1mm pitch top entry	No	Yes	No
Power	PH 7-way top entry	Yes	No	No
Slot loader	FFC 5-way 1mm pitch top entry	No	No	No
Tray loader	PH 5-way top entry	Yes	Yes	Yes
Traverse	PH 6-way top entry	Yes	Yes	Yes
CD OPU	FFC 16-way 1mm pitch side entry top contact	No	No	Yes
DVD OPU	FFC 24-way 0.5mm pitch side entry top contact	Yes	Yes	No

Table 1: Stuffing versions

4.2.2 Feature versions

Connector	CD-100/10 CD-100/FLAC	CD-100/20	CD-100/30
Control Interface protocol	UART	UART	I^2C or SPI
Q5 possible	Yes	Yes	Yes
Sonic2 possible	Yes	Yes	No

Table 2: Feature versions

4.3 Interfaces

4.3.1 Signal specifications

<table>
<tr><th>Signal type</th><th>Description</th><th>Definition</th></tr>
<tr><td>TTL</td><td>Transistor-transistor logic (5V logic)

Caution:
Exceeding the absolute maximum rating will cause damage to the module.</td><td>Absolute maximum rating:
V_{IN} = -0.5V to 5.5V
V_{OUT} = -0.5V to 5.5V

<table><tr><th>Parameter</th><th>Min</th><th>Max</th></tr><tr><td>V_{IH} (V)</td><td>2.0</td><td>-</td></tr><tr><td>V_{IL} (V)</td><td>-</td><td>0.8</td></tr><tr><td>V_{OH} (V)</td><td>2.4</td><td>-</td></tr><tr><td>V_{OL} (V)</td><td>-</td><td>0.4</td></tr></table></td></tr>
<tr><td>LVTTL</td><td>Low voltage transistor-transistor logic (3.3V logic)

Caution:
Exceeding the absolute maximum rating will cause damage to the module.</td><td>Absolute maximum rating:
V_{IN} = -0.5V to 3.8V
V_{OUT} = -0.5V to 3.8V
Maximum current drive: 4mA

<table><tr><th>Parameter</th><th>Min</th><th>Max</th></tr><tr><td>V_{IH} (V)</td><td>2.0</td><td>-</td></tr><tr><td>V_{IL} (V)</td><td>-</td><td>0.8</td></tr><tr><td>V_{OH} (V)</td><td>2.4</td><td>-</td></tr><tr><td>V_{OL} (V)</td><td>-</td><td>0.4</td></tr></table></td></tr>
<tr><td>I^2C</td><td>Inter-IC
All I^2C signals at the module's connectors are LVTTL levels.</td><td>[I^2C_SPEC]</td></tr>
<tr><td>SPI</td><td>Serial Peripheral Interface Bus.
All SPI signals at the module's connectors are LVTTL levels.</td><td>[SPI Block Guide V03.06]</td></tr>
<tr><td>I^2S</td><td>Inter-IC Sound
All I^2S signals at the module's connectors are LVTTL levels.</td><td>[I^2S_SPEC]</td></tr>
</table>

Table 3: Signal levels

4.4 Connector types and wiring requirements

Connector	Type	Max wiring length
MX	FFC 20-way 1mm pitch side entry top contact	150mm
Audio	FFC 30-way 1mm pitch side entry top contact	150mm
Universal Control	FFC 10-way 1mm pitch top entry	150mm
Power 6.3	FFC 16-way 1mm pitch top entry	200mm
Power	PH 7-way top entry	200mm
Slot loader	FFC 5-way 1mm pitch top entry	250mm
Tray loader	PH 5-way top entry	250mm
Traverse	PH 6-way top entry	150mm
CD OPU	FFC 16-way 1mm pitch side entry top contact	200mm
DVD OPU	FFC 24-way 0.5mm pitch side entry top contact	200mm

Table 4: Cable requirements

4.5 MX connector

Pin	Assignment	Direction	Type	Description
1	5V	Input	Power	5V power supply into CD-100 module
2	5V	Input	Power	5V power supply into CD-100 module
3	GND	-	-	Ground
4	GND	-	-	Ground
5	GND	-	-	Ground
6	8V	Input	Power	8V servo power supply into CD-100 module
7	8V	Input	Power	8V servo power supply into CD-100 module
8	Serial IF1	Input	LVTTL	I^2C clock signal
9	Serial IF3	Output	LVTTL	Interrupt request from CD-100 that new data is available
10	Serial IF2	IO	LVTTL	I^2C clock signal
11	GND	-	-	Ground
12	PCM MCLK	IO	LVTTL	Audio Masterclock
13	MCLK DIR	Input	LVTTL	Masterclock direction (if connected to GND, MCLK is output)
14	SPDIF OUT	Output	LVTTL	Digital audio SPDIF - signal from the CD-100 module
15	GND	-	-	Ground
16	PCM SCLK	Output	I^2S	Digital audio I^2S – bit clock
17	GND	-	-	Ground
18	PCM LRCK	Output	I^2S	Digital audio I^2S – word clock
19	GND	-	-	Ground
20	PCM LTRT	Output	I^2S	Digital audio I^2S – channel data

Table 5: MX connector

4.6 Audio connector

Pin	Assignment			Direction	Type	Description
	UART	I²C	SPI			
1	MCLK DIR			Input	LVTTL	Masterclock direction (if connected to GND, MCLK is output)
2	I²C_SPI_SEL			Input	LVTTL	I²C or SPI selection. CD-100 is always slave
	GND	3V3	GND	Inpu	LVTTL	For I²C pull to 3V3 for SPI to GND
3	Reset			Input-	LVTTL/OD	Reset Pin of B;ackfin. Must be open drain.
4	GND			-	-	Ground
5	SPDIF OUT			Output	LVTTL	SPDIF outl from the CD-100 module
6	GND			-	-	Ground
7	PCM LRCK			Output	I²S	Digital audio out I²S – word clock
8	PCM MCLK			IO	I²S	Audio Masterclock
9	GND			-	-	Ground
10	PCM LTRT			Output	I²S	Digital audio out I²S – channel data. Connected to pin 23
11	PCM SCLK			Output	I²S	Digital audio I²S out – bit clock
12	GND			-	-	Ground
13	EXT SDLR			Input	I²S	Digital audio in I²S – channel data
14	EXT LRCK			Input	I²S	Digital audio in I²S – word clock
15	EXT SCLK			Input	I2S	Digital audio I²S in – bit clock
16	GND			-	-	Ground
17	SDATA3			Output	LVTTL	optional - output for Class D operation; right channel bridge polarity
18	GND			-	-	Ground
19	SDATA2			Output	LVTTL	optional - output for Class D operation; left channel bridge polarity
20	GND			-	-	Ground
21	SDATA1			Output	I²S	Digital audio I²S out – right channel differential data (for Sonic2) or right channel class-D data (optional)
22	GND					
23	SDATA0			Output	I²S	Digital audio I²S out – left channel differential data (for Sonic2) or left channel class-D data (optional)
24	SIF5			IO	LVTTL	Serial Interface 5
	GND	A1	MOSI			I²C address device select or SPI data input..CD-100 is slave
25	MUTE			Output	LVTTL	Indicates to the set to mute Audio outputs when set to low
26	SIF4					Serial Interface 4
	n.a.	n.a.	MISO	Output	LVTTL	SPI data output. CD-100 is slave
27	SIF3			Output	LVTTL	Serial Interface 3
	n.a.	IRQ	IRQ			IRQ to system muC. Active Low
28	SIF2			Input	LVTTL	Serial Interface 2
	RX	SDA	GND			Data Input
29	SIF1			Output	LVTTL	Serial Interface 1
	TX	SCL	SCLK			I²C or SPI clock input.
30	SIF0			Input	LVTTL	Serial Interface 0
	n.a.	A0	CS			I²C address device select or SPI chip select. SPI CS is active Low.

Table 6: Audio connector

4.7 Universal Control Connector

Pin	Assignment	Direction	Type	Description
1	IR	Input	LVTTL	Input from IR-eye into CD-100 module
2	SPI_CS1	Output	LVTTL	SPI chips select 1 for external SPI device
3	SPI_CS2	Output	LVTTL	SPI chips select 2 for external SPI device
4	SPI_MISO	Input-	LVTTL	SPI data in
5	SPI_MOSI	Output	LVTTL	SPI data out
6	SPI_SCLK	Output	LVTTL	SPI serial clock. CD-100 is always SPI master
7	3V3	Output	Power	3.3V supply for external device (e.g. RC eye)
8	GND	-	-	Ground
9	UART TX	Output	LVTTL	UART transmit output into CD-100 module
10	UART RX	Input	LVTTL	UART receive input into CD-100 module

Table 7: Universal Control connector

4.8 Power 6.3 Connector (for compatibility with SD6.3)

Pin	Assignment	Direction	Type	Description
1	GND	-	-	Ground
2	NC	-	-	Not connected
3	NC	-	-	Not connected
4	NC	-	-	Not connected
5	NC	-	-	Not connected
6	GND	-	-	Ground
7	8V	Input	Power	8V servo supply for servo driver
8	GND	-	-	Ground
9	5V	Input	Power	5V supply
10	5V	Input	Power	5V supply
11	5V	Input	Power	5V supply
12	1V8	Input	Power	1.8V supply
13	1V8	Input	Power	1.8V supply
14	8V	Input	Power	8V servo supply for servo driver
15	GND	-	-	Ground
16	GND	-	-	Ground

Table 8: Power 6.3 connector

4.9 Power Connector

Pin	Assignment	Direction	Type	Description
1	GND	-	-	Ground
2	8V	Input	Power	8V servo supply for servo driver
3	GND	-	-	Ground
4	5V*2)	Input	Power	5V supply*2)
5	GND	-	-	Ground
6	3V3*2)	-	-	3.3V supply optional. Not used in /10 standard version
7	GND	-	-	Ground

*2) The CD-100/10 has a power regulator on board so that either the 3V3 input or the 5V input can be used but not both simultaneously

Table 9: Power connector

4.10 Slot Loader Connector (for JPSL-33)

Pin	Assignment	Direction	Type	Description
1	SW_CLOSE	Output	LVTTL	Open switch
2	SW_OPEN	Output	LVTTL	Close Switch2)
3	SW_ROOT	Output	GND	Common pin of Open and Close switch
4	MTR_NEG	Output	Power	Negative output of driver bridge
5	MTR_POS	Output	Power	Positive output of driver bridge

Table 10: Slot loader connector

4.11 Tray Loader Connector (for JPSL-2580)

Pin	Assignment	Direction	Type	Description
1	MTR_POS	Output	Power	Positive output of driver bridge
2	MTR_NEG	Output	Power	Negative output of driver bridge
3	SW_OPEN	Output	LVTTL	Open Switch
4	SW_ROOT	Output	GND	Common pin of Open and Close switch
5	SW_CLOSE	Output	LVTTL	Close Switch

Table 11: Tray Loader connector

4.12 Traverse Connector for version CD-100/10 or CD-100/FLAC

Pin	Assignment	Direction	Type	Description
1	MSP_POS	Output	Analogue	Positive output of driver bridge for spindle/turntable motor
2	MSP_NEG	Output	Analogue	Negative output of driver bridge for spindle/turntable motor
3	Innerswitch	Input	LVTTL	Innerswitch. If closed, pickup is fully inside
4	GND	-	GND	GND for innerswitch
5	MSL_NEG	Output	Analogue	Negative output of driver bridge for sledge/slider motor
6	MSL_POS	Output	Analogue	Positive output of driver bridge for sledge/slider motor

Table 12: Traverse connector

4.13 CD OPU Connector

Pin	Assignment	Direction	Type	Description
1	FCS_NEG	Output	Power	Positive output to focus actuator
2	TRK_POS	Output	Power	Positive output of track actuator
3	TRK_NEG	Output	Power	Negative output of track actuator
4	FCS_POS	Output	Power	Negative output to focus actuator
5	PD_MON	Input	Analogue	Laser Monitor Diode
6	VR	Input	Analogue	ALPC potentiometer
7	LD	Output	Analogue	Laser Diode
8	GND	-	-	OPU Ground
9	F	Input	Analogue	Satellite Diode 1
10	C	Input	Analogue	Central Diode C
11	B	Input	Analogue	Central Diode B
12	A	Input	Analogue	Central Diode A
13	D	Input	Analogue	Central Diode D
14	E	Input	Analogue	Satellite Diode 2
15	V_{cc}	Output	Power	Power supply for OPU
16	V_{ref}	Output	Power	Reference voltage for PD-IC

Table 13: CD OPU connector

4.14 DVD OPU Connector

Pin	Assignment	Direction	Type	Description
1	FCS_NEG	Output	Power	Positive output to focus actuator
2	FCS_POS	Output	Power	Negative output to focus actuator
3	TRK_POS	Output	Power	Positive output of track actuator
4	TRK_NEG	Output	Power	Negative output of track actuator
5	C/c	Input	Analogue	Central Diode C
6	D/d	Input	Analogue	Central Diode D
7	SW_DVD/CD	Output	-	Connected to V_{cc}
8	RF	Output	Analogue	RF signal
9	A/a	Input	Analogue	Central Diode A
10	B/b	Input	Analogue	Central Diode B
11	F	Input	Analogue	Satellite Diode 1
12	GND	-	-	OPU Ground
13	V_{ref}	Output	Power	Reference voltage for PD-IC
14	V_{cc}	Output	Power	Power supply for OPU
15	E	Input	Analogue	Satellite Diode 2
16	N/C	-	-	
17	CD_VR	Input	Analogue	ALPC potentiometer for CD
18	DVD_VR	-	-	
19	CD_LD	Output	Analogue	CD Laser Diode
20	PD_MON	Input	Analogue	Laser Monitor Diode
21	N/C	-	-	
22	N/C	-	-	
23	DVD_LD	-	-	Connected to Ground
24	GND_LD	-	-	Laser diode Ground

Table 14: DVD OPU connector

5 Playability

5.1 Media

No	Media	Data type	Remark
5.1.1	CDDA	CD digital audio	Including CD text and "copy protected" CD
5.1.2	Hybrid SACD	CD layer	
5.1.3	CDR/CDRW	CD digital audio	
5.1.4	CDR/CDRW	MP3 (ISO9660, Joliet)	Multi-session, finalized
5.1.5	CDR/CDRW	WMA (ISO9660, Joliet)	Multi-session, finalized
5.1.6	CDR/CDRW	FLAC (ISO9660, Joliet)	Multi-session, finalized

Table 15: Playability - Media

5.2 Decoders

No	Decoder/Stereo	Bit rate/fs/bits per sample	Remark
5.2.1	CDDA	1.411Mbps/44.1kHz/16bit	
5.2.2	MP3	up to 2,56Mbps/48kHz/16bit	
5.2.3	WMA	up to 2,56Mbps/48kHz/16bit	Lossy WMA9 stereo, no DRM
5.2.4	FLAC	up to 4,5Mbps/96kHz/24bit	Only in CD-100FLAC version

Table 16: Playability - Decoders

5.3 Test discs

No	Test disc	Item	Remark
5.3.1	SBC444A track7	Wedge 600µm	No audible disturbances
5.3.2	SBC444A track14	Black dot 600µm	No audible disturbances
5.3.3	SBC444A track19	Fingerprint	No audible disturbances
5.3.4	Subchassis 8A track8	Bad RF	No audible disturbances and fast searching check
5.3.5	Subchassis 8A track15	Maximum read out diameter	Check the max. diameter read out performance.
5.3.6	Philips 8cm 0.6deg skew disc tracks 1 and 6	Skew	Start up and play with the first 10mins. Check 4 positions each 90deg turned from the previous
5.3.7	TDC-732RA vertical deviation disc. First and last track	Vertical deviation	No failure during startup and play. Check 4 positions each 90deg turned from the previous
5.3.8	Philips Eccentricity disc. First and last track	Eccentricity 150 µm	No failure during startup and play. Check 4 positions each 90deg turned from the previous
5.3.9	CDRW SBC444A track13	Black dot	No audible disturbances
5.3.10	CDRW SBC444A track17	Fingerprint	No audible disturbances
5.3.11	CDRW high reflection. First and last track	High reflection	No audible disturbances
5.3.12	CDRW low reflection. First and last track	Low reflexion	No audible disturbances

Table 17: Playability – Test discs

6 Sonic Scrambling™

		Mode				
Pin	**Signal**	**44.1**	**176.4**	**176.4 Sonic2**	**352.8**	**Class D (option for later use)**
7	PCM LRCLK	44.1kHz	176.4kHz	176.4kHz	352.8kHz	-
11	PCM SCLK	2.1168MHz	8.4672MHz	8.4672MHz	8.4672MHz	-
23	SDATA0	2-channel PCM (L,R)	2-channel PCM (L,R)	2-channel PCM (L+,L-)	1-channel PCM (L)	PWM L+
21	SDATA1	-	-	2-channel PCM (R+,R-)	1-channel PCM (R)	PWM L-
19	SDATA2	-	-	-	-	PWM R+
17	SDATA3	-	-	-	-	PWM R-
5	DO_SPDIF	Fs=44.1 or 88.2kHz*1	Fs=44.1 or 88.2kHz*1	Fs=44.1 or 88.2kHz*1	Fs=44.1 or 88.2kHz*1	n.a.

*1.. selectable by Software Command

Table 18: Audio signals

6.1 Sonic Scrambling

The Sonic2™ output stage is based on the Sonic Scrambling™ technology, a data distribution technology that improves linearity in multi-DAC designs. The idea of the Sonic Scrambling™ is to provide highest quality Digital to Analog conversion using two DACs per channel in differential mode. However the key is that the signals sent to both DACs of a given channel (DAC+ and DAC-) are identical. They are exact sign opposites of each other with a (low level) random biasing signal which is added to DAC+ and DAC- respectively in order to de-correlate the signal's LSBs from its content. By doing so, low level signal linearity is enhanced as these signals reproduced by the DAC will be of random nature, thus spreading possible signal related distortion effects. Figure 1 reports a typical configuration that is used for interfacing the Sonic2™ output lines with the multi-DAC stages and the analog differential amplifiers.

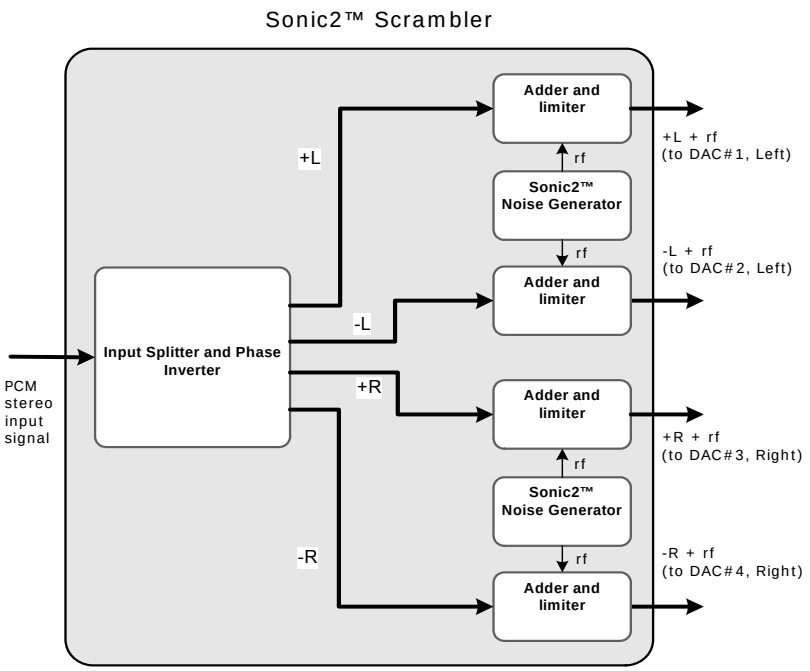

Figure 6: Sonic Scrambling block diagram

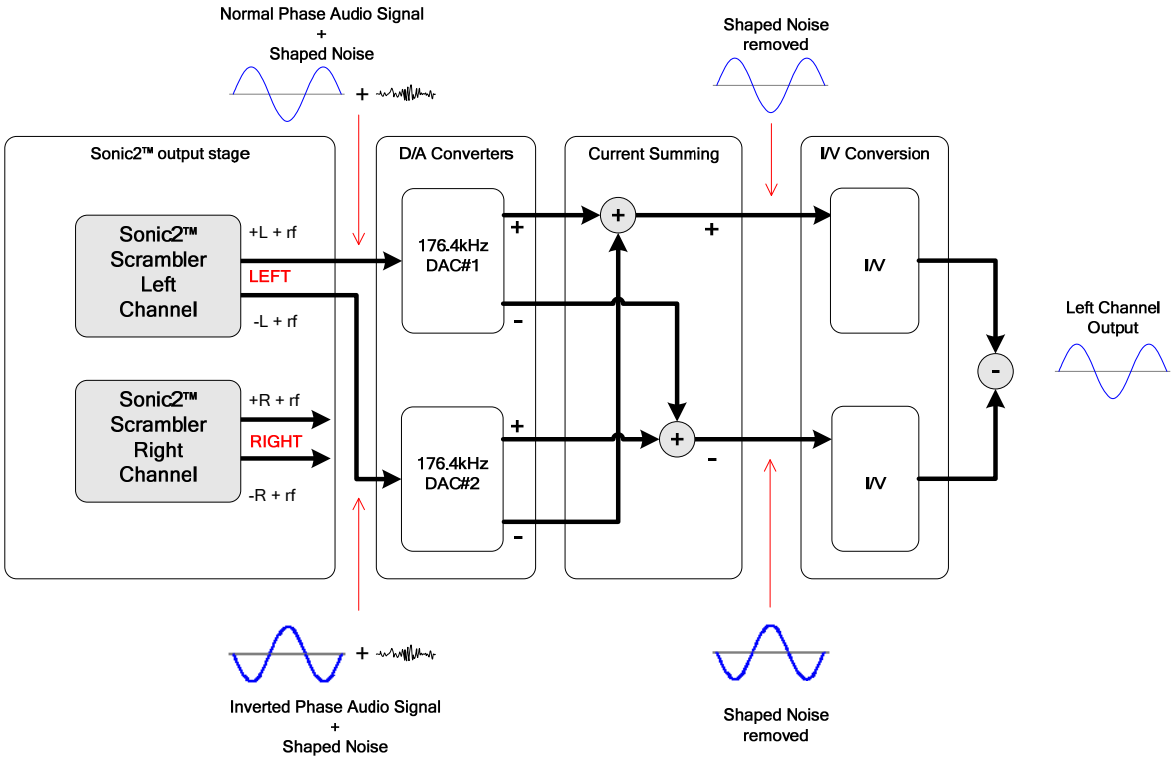

Figure 7: Sonic Sonic Scrambling standard output configuration

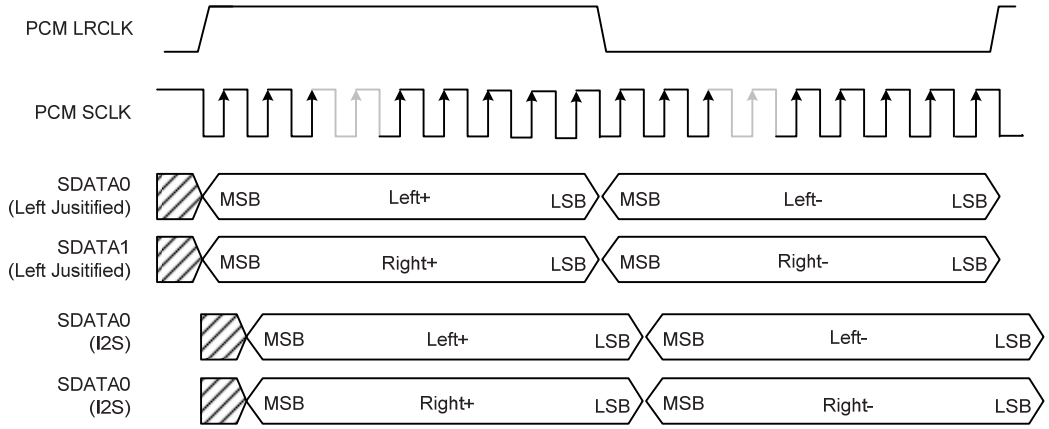

Figure 8: 176.4kHz Sonic Scrambling output signals

7 I²S Input

CD-100 support data from an external I2S input and can perform the Q5 upsampling and Sonic2 postprocessing on this input. The sample rate conversion works asynchronously, that means the upsampled data follows 100% the CD-100 MCLK, be it internal or external. For details see "Application Note External Input"

8 Power supply requirements

8.1 Power cycle timing

The CD-100 DSP module operates in power-off and power-on mode only. There is no standby mode at module level. In power-off mode, the module does not respond to any communication or signals.

Reset of the board is via an internal reset circuit, which is tied to the 3V3 supply. The reset will be activated immediately in case of a dip of 5V supply exceeding low spec limit. Note the delay at power on.

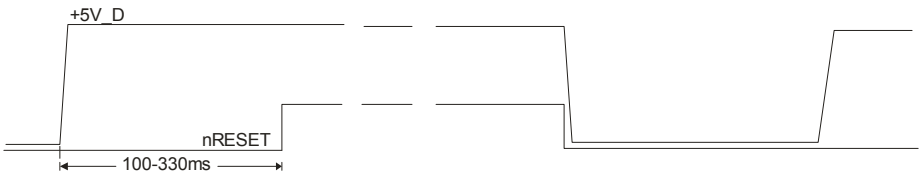

Figure 9: Power cycle timing

The sequencing of 8V supply and 5V supply is not critical. It is even possible to leave the 8V supply active permanently while the 5V is off e.g. in tuner mode of the application for reduced power consumption and self pollution.

8.2 Temperature

	Temperature Range (degree Celsius)
Evaluation Condition	25±5
Operating	0-55
Storage	-10...+70

Table 19: Temperature Range

8.3 Absolute maximum ratings

Voltage name	Mimimum input voltage (V_{ABSMIN} / V)	Maximum input voltage (V_{ABSMAX} / V)
5V	-0.3	7.5
8V	-0.5	9

Table 20: Absolute maximum ratings

8.4 Power Consumption

Vesrsion	Voltage name	Input voltage (V_{DC}/V)				Ripple noise voltage (V_{PP}/mV)	Current consumption (I_{DC}/mA)		
		Power-on			Power-off		Power-on		
		Min.	Typ.	Max.			Min.	Typ.	Max.
CD-100/10	5V	4.20	5.00	6.00	< 0.10	100	180	250	400
	8V	6.00	8.00	9.00	< 0.10	200	20	180	800
CD-100/20	1V8	t.b.f.	t.b.f.	t.b.f.	< 0.10	50	t.b.f.	t.b.f.	t.b.f.
	5V	4.20	5.00	6.00	< 0.10	100	180	250	400
	8V	6.00	8.00	9.00	< 0.10	200	20	180	800
CD-100/30	5V	4.20	5.00	6.00	< 0.10	100	180	250	400
	8V	6.00	8.00	9.00	< 0.10	200	20	180	800
CD-100/FLAC									

Table 21: Normal operating conditions